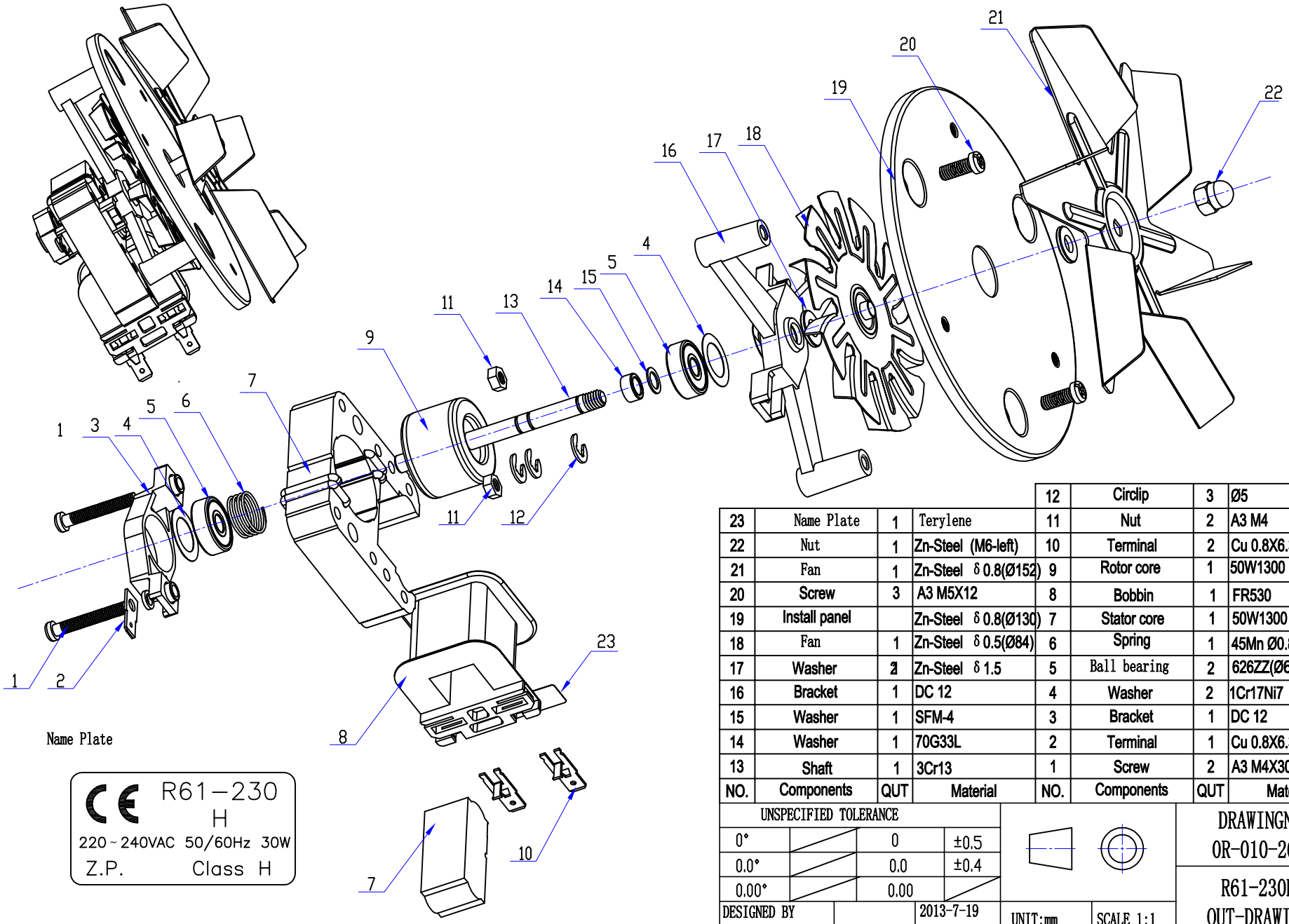

NO.	Components	QUT	Material	NO.	Components	QUT	Material
				12	Circlip	3	Ø5
23	Name Plate	1	Terylene	11	Nut	2	A3 M4
22	Nut	1	Zn-Steel (M6-left)	10	Terminal	2	Cu 0.8X6.35
21	Fan	1	Zn-Steel δ0.8(Ø152)	9	Rotor core	1	50W1300
20	Screw	3	A3 M5X12	8	Bobbin	1	FR530
19	Install panel		Zn-Steel δ0.8(Ø130)	7	Stator core	1	50W1300
18	Fan	1	Zn-Steel δ0.5(Ø84)	6	Spring	1	45Mn Ø0.8
17	Washer	2	Zn-Steel δ1.5	5	Ball bearing	2	626ZZ(Ø6×Ø19×6)
16	Bracket	1	DC 12	4	Washer	2	1Cr17Ni7 δ0.2
15	Washer	1	SFM-4	3	Bracket	1	DC 12
14	Washer	1	70G33L	2	Terminal	1	Cu 0.8X6.35
13	Shaft	1	3Cr13	1	Screw	2	A3 M4X30

UNSPECIFIED TOLERANCE

0°		0	±0.5
0.0°		0.0	±0.4
0.00°		0.00	

DESIGNED BY		2013-7-19	
PROOFREAD BY			
AUDITINGED BY		2013-7-19	
APPROVED BY			

DATE

UNIT:mm SCALE 1:1

REVISION:A

SHEET: 1 of 1

DRAWINGNO: OR-010-2658

R61-230H OUT-DRAWING

Undercontrol